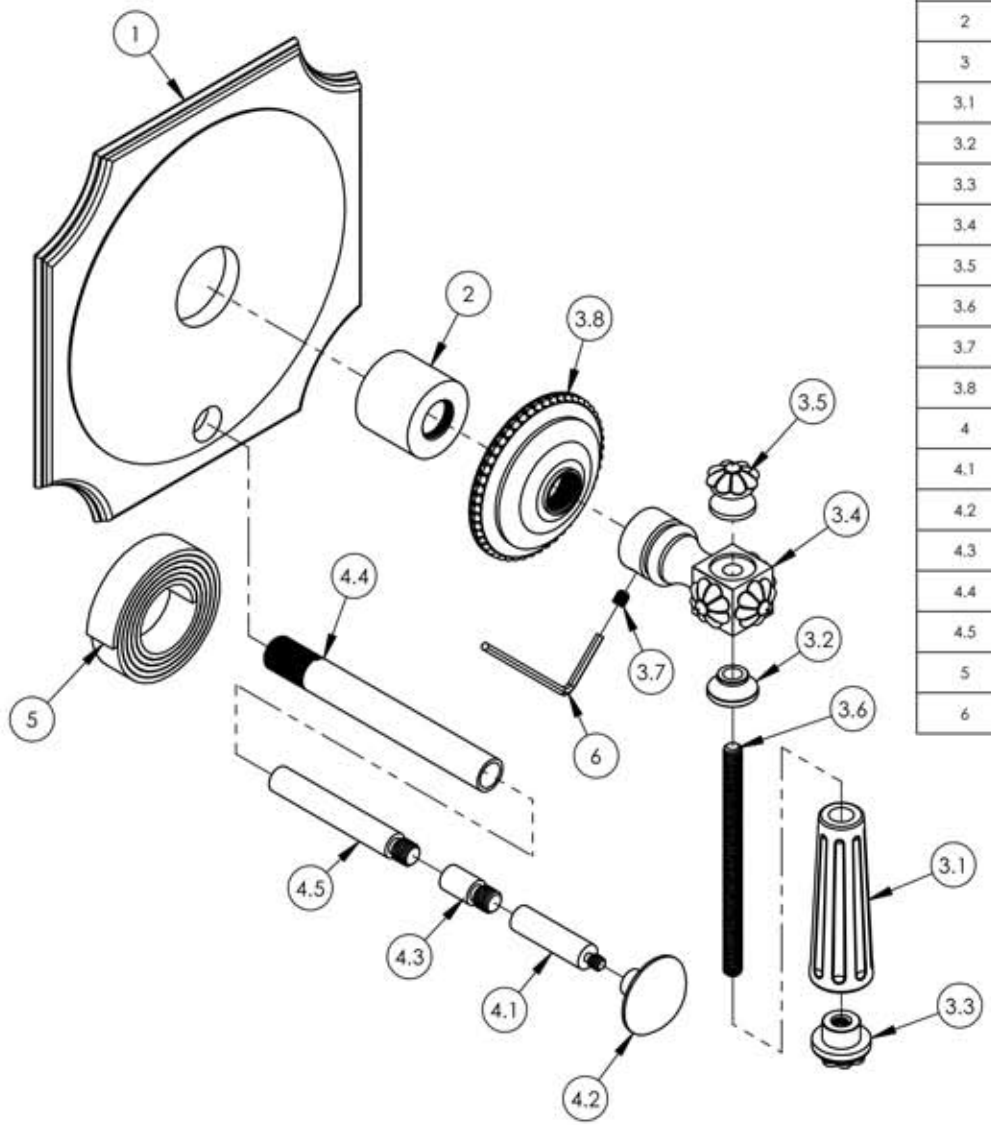

ITEM NO.	PART NUMBER	DESCRIPTION	QTY.
1	10516/00	TRIM PLATE DIVERTED, FRENCH TRAD. PB/THERMO	1
2	10986	CENTERING PLATE SLEEVE	1
3	3-030/00	HANDLE LEVER, MARVELLE SEIRES	1
3.1	10541/00	LEVER HANDLE INSERT, MARVELLE	1
3.2	11102/00	BASE HANDLE FOR LEVER HEX TRADITIONAL 500 SERIES	1
3.3	2-111/00	SUB-ASSY. END CAP FINIAL, MARVELLE	1
3.4	2-113/00	SUB-ASSY. LEVER TRASITION FINIAL, MARVELLE	1
3.5	2-112/00	SUB-ASSY. FINIAL EXTENSION BACK LEVER	1
3.6	10543	THREADED ROD, 1/4"-20 X 3"-5/8 L	1
3.7	92008	SET SCREW, CUP POINT 8-32	2
3.8	10540/00	ESCUTCHEON, MARVELLE SERIES	1
4	3-125/00	EXTENSION ASSY FOR PB TUB & SHOWER SET	1
4.1	11008/00	DIVERTED STEM FOR PB PLATE	1
4.2	11006/00	PULL KNOB, DIVERTER, 10-24	1
4.3	11085/00	EXTENSION PIN FOR PB TUB & SHOWER SET	1
4.4	11009/00	EXTENSION SLEEVE FOR STEM, PB TUB & SHOWER SET	1
4.5	11007/00	EXTENSION PIN FOR PB TUB & SHOWER SET 1.25LONGER	1
5	90537	1/16" TAPE FOR WALL PLATE	1
6	92184	HEX L-KEY 3/32" HEX x 2 1/8"L	1

ZONE	REV.	DESCRIPTION	DATE	APPROVED
ALL	A	-ASSY. UPDATED WITH SUB ASSY'S	12/4/2015	GRE

REVISIONS

1261 LOGAN AVENUE
COSTA MESA, CALIFORNIA 92626
PHONE: 714.361.4800
FAX: 714.617.3120

PHYLRICH®
Defining Luxury Since 1959

PROPRIETARY AND CONFIDENTIAL
THE INFORMATION CONTAINED IN THIS DRAWING IS THE SOLE PROPERTY OF RSS MANUFACTURING. ANY REPRODUCTION IN PART OR AS A WHOLE WITHOUT THE WRITTEN PERMISSION OF RSS MANUFACTURING IS PROHIBITED.

NEXT ASSY	USED ON
-	-
-	-
-	-

APPLICATION
MATERIAL
FINISH

DO NOT SCALE DRAWING

INTERPRET GEOMETRIC DIMENSIONING & TOLERANCING IN ACCORDANCE WITH ASME Y14.5-2009 & ASME Y14.41-2003 STANDARDS. UNLESS OTHERWISE SPECIFIED, DIMENSIONS ARE IN INCHES. TOLERANCES ARE:

FRACTIONS	DECIMALS	ANGULAR
±1/64"	X.X: ±.1 X.XX: ±.01 X.XXX: ±.005	±.5°

	NAME	DATE
DRAWN	LLO	10/15/2015
CHECKED	GRE	

PRESSURE BALANCE SHOWER PLATE W/ DIVERTER & HANDLE TRIM SET, LEVER HANDLE, MARVELLE SERIES

SIZE	ASM/PRT NO.	REV
A	4-480/00	A

SCALE: 1:2.5 | WEIGHT: lbs. | SHEET 1 OF 2